NOTICE

*Please make sure that you have all parts indicated and they are in good condition before you begin assembly of this item. Refer to part list and hardware list below for guidance.
*This item should be assembled on a soft surface to prevent scratching the finish during assembly.
*This item may require periodic tightening.
*If you are having difficulty, our friendly Customer Care team is always here to help. Please email **customersupport@safavieh.com**

PREPARATION

*Before beginning assembly of product, make sure all parts are present. Compare parts with part contents list and hardware contents list.
*If any part is missing or damaged, do not attempt to assemble the product.
*Estimated Assembly Time: 60 minutes.
*Tools Required for Assembly: Phillips Head Screwdriver & Allen Key (Included)

CARE AND MAINTENANCE

Adhesive felt pads should always be applied to areas of furniture which make direct contact with flooring, said application will prevent damage to the furniture and or surfaces on which the furniture lies. Objects placed on articles of furniture should rest on non abrasive material as to prevent damage to the wood finish. Objects whose composition consists of plastic and rubber are known to discolor and damage the wood surfaces on which they rest. Wipe up spills immediately and avoid common hazards such as hot dishes, harsh solvents and abrasives. Cleaning should be done with a soft lint free cotton cloth dampened with water or furniture polish. On highly used surfaces we recommend applying a quality paste wax which should be used on a regular basis to provide additional protection from scratches and spills. How often you apply the wax depends on how much wear the furniture receives.

Model# MED9622

Product Dimensions: 59.09”Wx15.66”Dx24.84”H

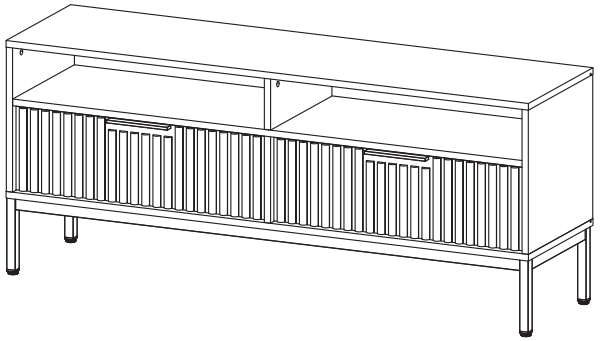

Part List

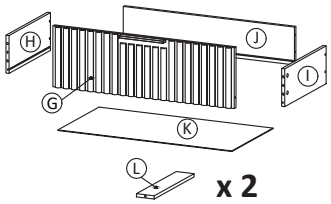

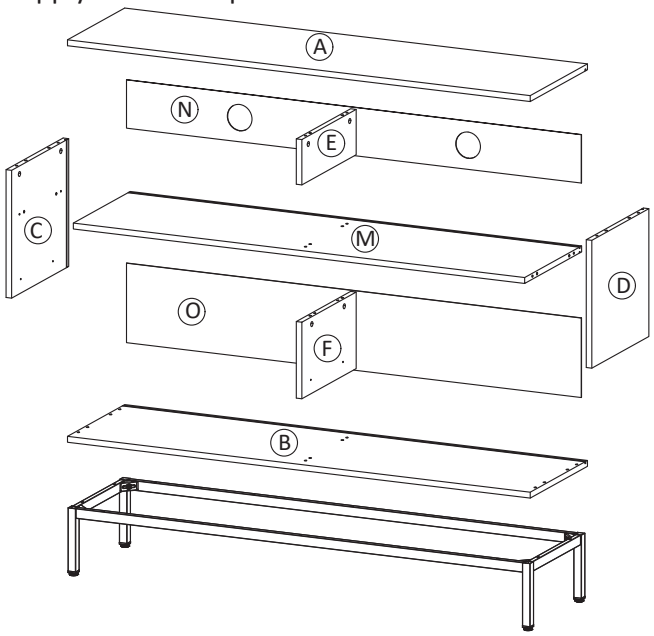

⚠ WARNING

This product is intended for use with a FLAT SCREEN TV ONLY
Maximum Screen Size: 65 inches
Weight Limit: 88 lbs
Shelf Load Limit: 37 lbs
Drawer Load Limit: 31 lbs
Use with heavier televisions may result in instability causing tip over resulting in death or Serious injury.

⚠ WARNING

Death or serious injury may occur when children climb on audio and/or video equipment furniture. A remote control or toys placed on the furnishing may encourage a child to climb on the furnishing and as a result the furnishing may tip over on the child.

Hardware List

HW1x22 Ø 6 x 35 mm	HW2x12 Ø 15 mm	HW3x10 Ø 12 mm	HW4x4 Ø 6 x 30 mm	HW5x16 Ø 8 x 30 mm
HW6x2 Ø 8 x 50 mm	HW7x8 M 7 x 50 mm	HW8x14 M 6.4 x 45 mm	HW9x4	HW10x2 L 4
HW11x8 M 6 x 10.5 mm	HW12x12 M 3.5 x 13 mm	HW13x12 M 8 x 39 mm	HW14x28 M 3.5 x 15.5 mm	HW15x28
HW16x2	HW17x4 M 4 x 22 mm	HW18x6 Ø 15 mm	HW19x2	HW20x2
HW21x4	HW22x4	HW RM35Ax2 350 mm		

Part List & HW For Multi-Box Items

Piece	Description	Qty
A	Top Board	1
B	Bottom Board	1
C	Side Board Left	1
D	Side Board Right	1
E	Center Board Small	1
F	Center Board Big	1
G	Front Drawer	2
H	Side Drawer Left	2
I	Side Drawer Right	2
J	Back Drawer	2
K	Bottom Drawer	2
L	Support Drawer	2
M	Fixed Shelf	1
N	Back Board Small	1
O	Back Board Big	1

Piece	Description	Qty
HW1	Cambolt	22
HW2	CamLock Big	12
HW3	CamLock Small	10
HW4	Dowel Small	4
HW5	Dowel Medium	16
HW6	Dowel Big	2
HW7	Screw M 7 x 50 mm	8
HW8	Screw M 6.4 x 45 mm	14
HW9	Support Corner Brace&Screw M 6 x 40 mm	4
HW10	Allen Key	2
HW11	Screw M 6 x 10.5 mm	8
HW12	Screw M 3.5 x 13 mm	12
HW13	Screw M 8 x 39 mm	12
HW14	Screw M 3.5 x 15.5 mm	28
HW15	Wedge	28
HW16	Handle	2
HW17	Screw M 4 x 22 mm	4
HW18	Screw Cap	6
HW19	Support Metal Leg 1	2
HW20	Support Metal Leg 2	2
HW21	Metal Square Leg	4
HW22	Corner Brace	4
HW RM35A	Drawer Runner	2

PREPARATION

*Before beginning assembly of product, make sure all parts are present. Compare parts with part contents list and hardware contents list.
*If any part is missing or damaged, do not attempt to assemble the product.
*Estimated Assembly Time: 60 minutes.
*Tools Required for Assembly: Phillips Head Screwdriver & Allen Key (Included)
*If you are having difficulty, our friendly Customer Care team is always here to help. Please email **customersupport@safavieh.com**

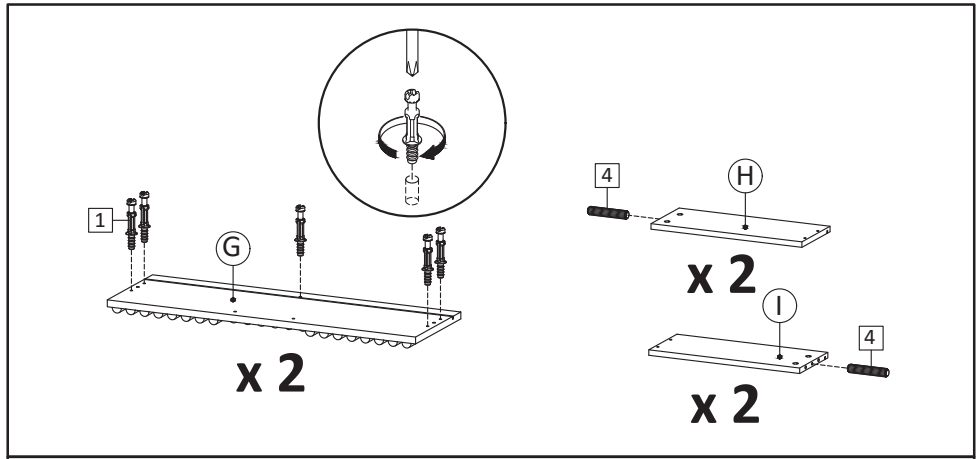

STEP1: Insert Cambolt (HW1) into Front Drawer (G).
Insert Dowel Small (HW4) into Side Drawers (H&I).

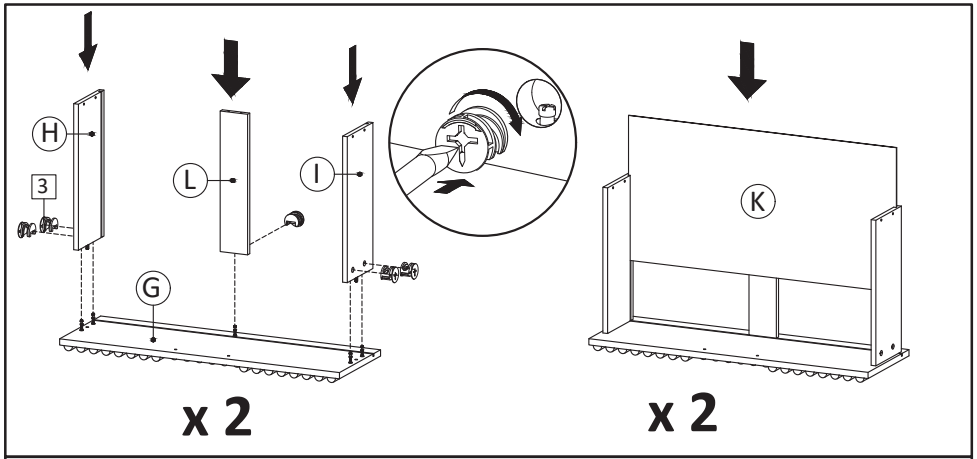

STEP2: Combine Side Drawers (H&I) and Support Drawers (L) into Front Drawer (G) then tighten camlock (HW3) using screwdriver. Insert Bottom Drawer (K) into Front Drawer with laminated face facing upward.

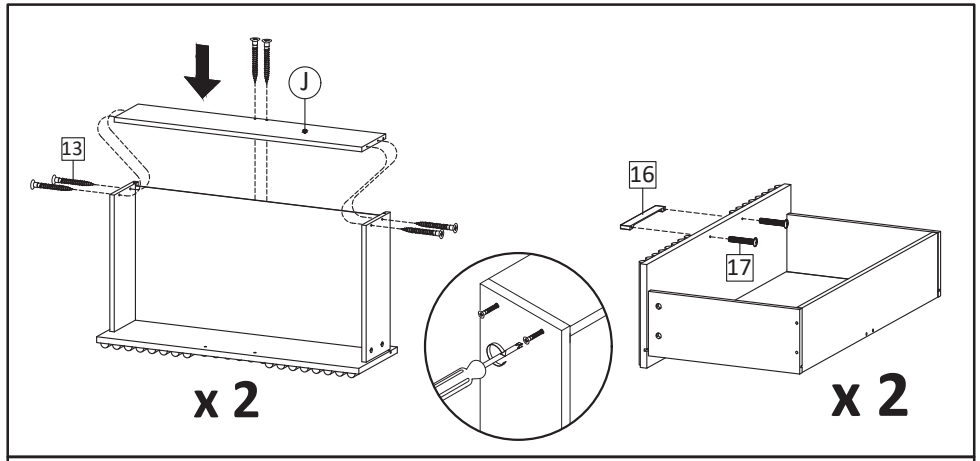

STEP3: Insert Back Drawer (J) and secure with Screw M8x39mm (HW13). Use Screw M4x22mm (HW17) to attach Handle (HW16) to the Front Drawer.

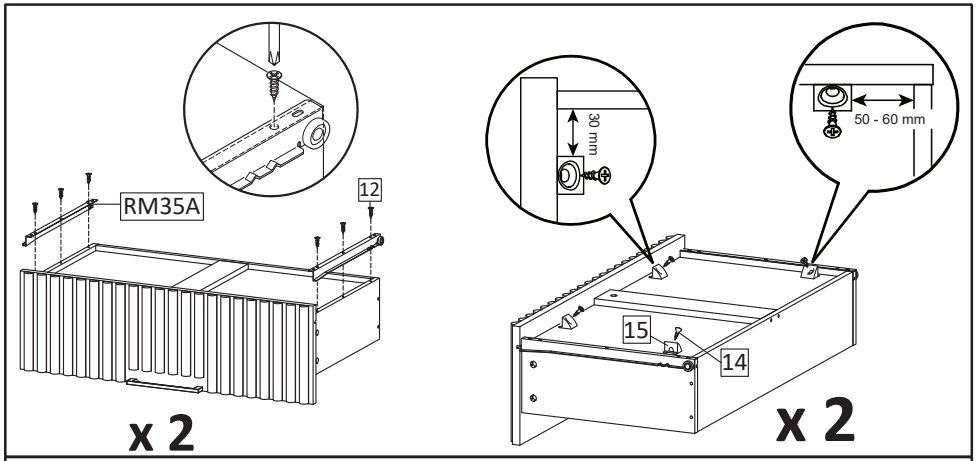

STEP4: Install the Drawer Runner (HW RM35A) into position as shown in picture. Secure with screws M3.5x13mm (HW12). Insert the Screw M3.5x15.5mm (HW14) and wedge (HW15) into the bottom of the drawer according to the picture.

PREPARATION

*Before beginning assembly of product, make sure all parts are present. Compare parts with part contents list and hardware contents list.
*If any part is missing or damaged, do not attempt to assemble the product.
*Estimated Assembly Time: 60 minutes.
*Tools Required for Assembly: Phillips Head Screwdriver & Allen Key (Included)
*If you are having difficulty, our friendly Customer Care team is always here to help. Please email **customersupport@safavieh.com**

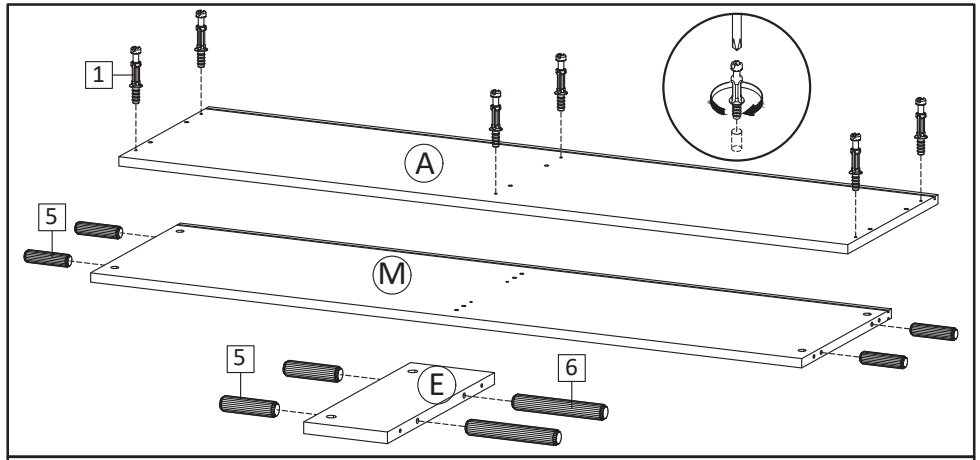

STEP5: Insert Cambolt (HW1) into Top Board (A),and Insert Dowel Medium (HW5) into Fixed Shelf (M) And Center Board Small (E). Insert Dowel Big (HW6) into position as the above image.

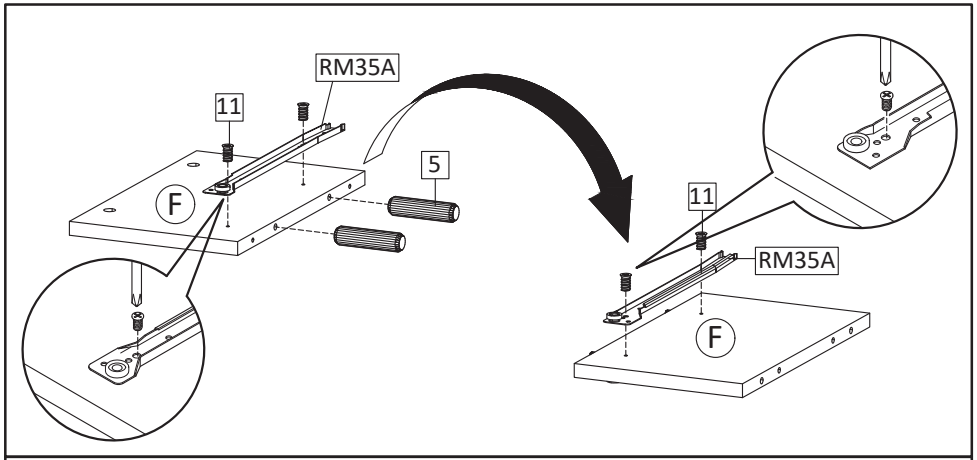

STEP6: Part of Drawer Runner must be installed to Center Board Big (F). Secure part of the Drawer Runner (HW RM35A) into position as the above image, using screw M6x10.5mm (HW11) and insert Dowel Medium (5), then flip the board to access the opposite surface.

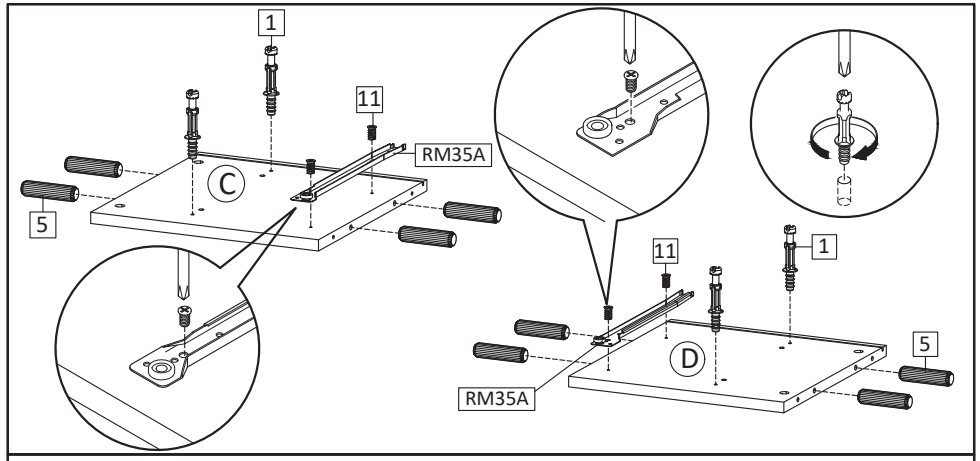

STEP7: Insert Dowel Medium (HW5) into Side Board Left (C) and Side Board Right (D).
Insert Cambolt (HW1) into Side Board Left (C) and Side Board Right (D).
Continue with securing part of the Drawer Runner (HW RM35A) into position as the above image, using screw M6x10.5mm (HW11).

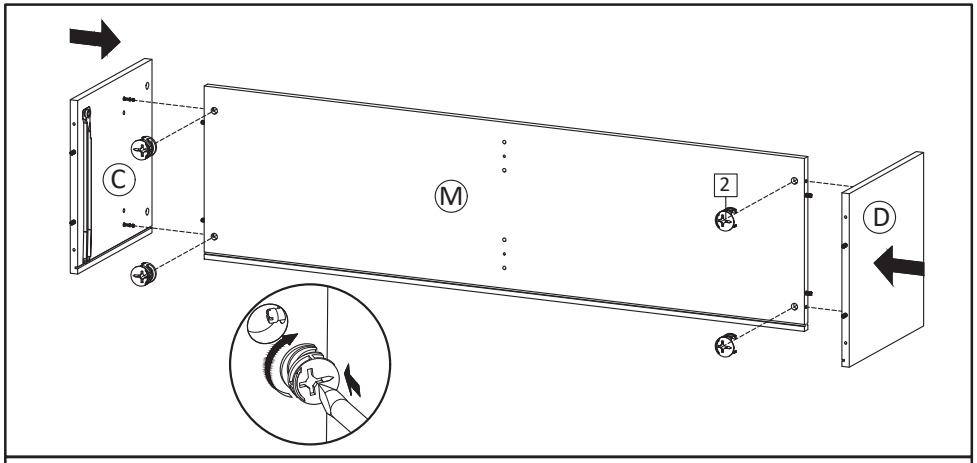

STEP8: Attach Side Board Left (C) and Side Board Right (D) into Fixed Shelf (M),Insert Camlock Big (HW2) and tighten it using screwdriver.

PREPARATION

*Before beginning assembly of product, make sure all parts are present. Compare parts with part contents list and hardware contents list.
*If any part is missing or damaged, do not attempt to assemble the product.
*Estimated Assembly Time: 60 minutes.
*Tools Required for Assembly: Phillips Head Screwdriver & Allen Key (Included)
*If you are having difficulty, our friendly Customer Care team is always here to help. Please email **customersupport@safavieh.com**

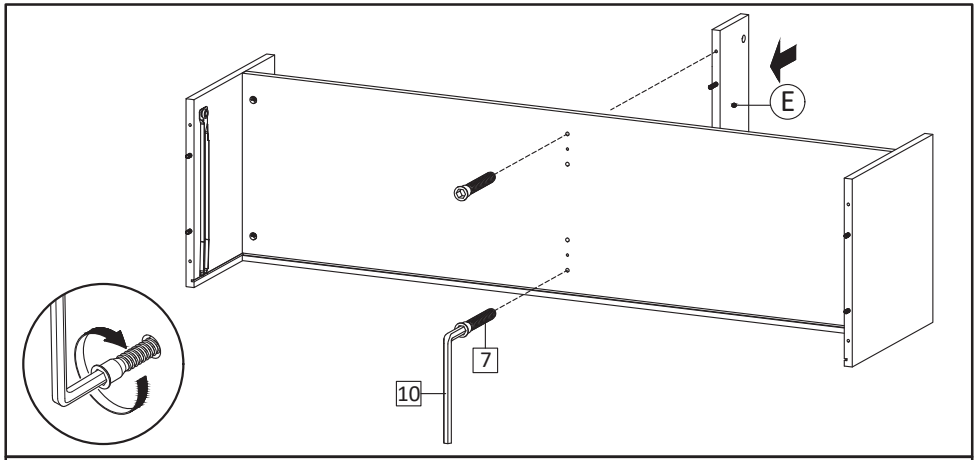

STEP9: Continue by attaching Center Board Small (E) into the assembled components from step 8. secure with Screw M7x50mm (HW7) using Allen Key (HW10).

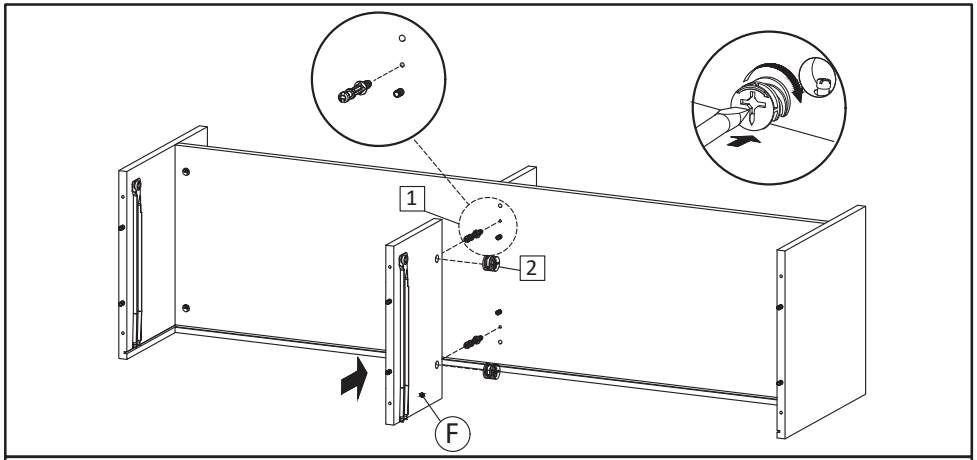

STEP10: First insert Cambolt (HW1) into Fixed Shelf. Then attach Center Board Big (F) Insert Camlock Big (HW2) and tighten it using screwdriver.

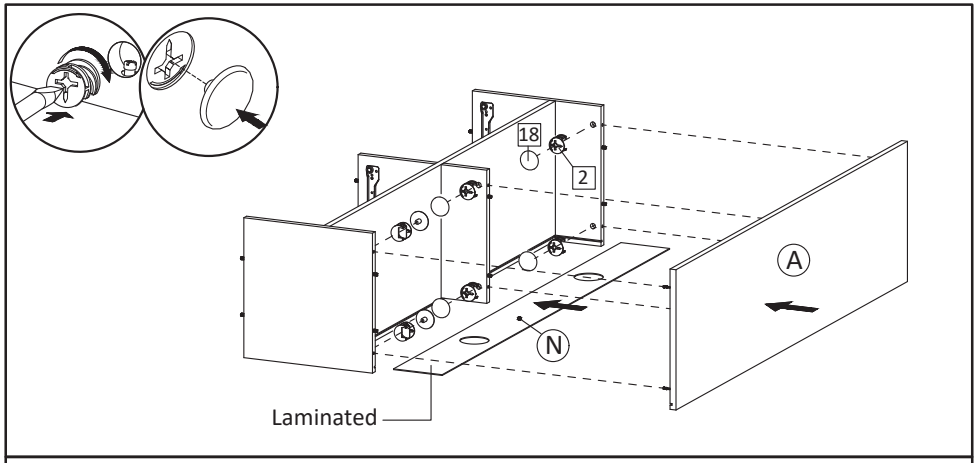

STEP11: Insert Back Board Small (N) into the grooved lines of the assembled body. Then attach Top Board (A) secure with Camlock Big (HW2) and tighten it using screwdriver. Put the Screw Cap(HW18) over the tightened camlock.

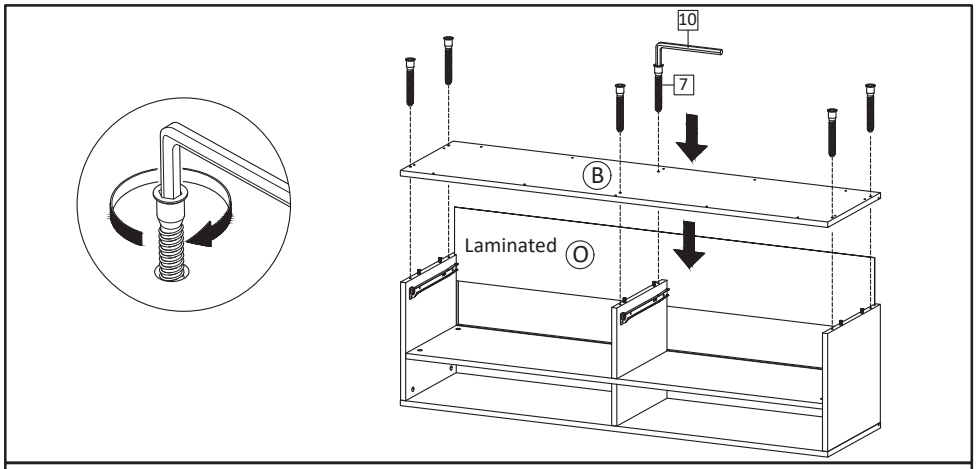

STEP12: Bring the Assembled component as position in the drawing. Insert Back Board Big (O) into the grooves lines. Then attach the Bottom Board (B)secure with Screw M7x50mm (HW7) using Allen Key (HW10).

PREPARATION

*Before beginning assembly of product, make sure all parts are present. Compare parts with part contents list and hardware contents list.
*If any part is missing or damaged, do not attempt to assemble the product.
*Estimated Assembly Time: 60 minutes.
*Tools Required for Assembly: Phillips Head Screwdriver & Allen Key (Included)
*If you are having difficulty, our friendly Customer Care team is always here to help. Please email **customersupport@safavieh.com**

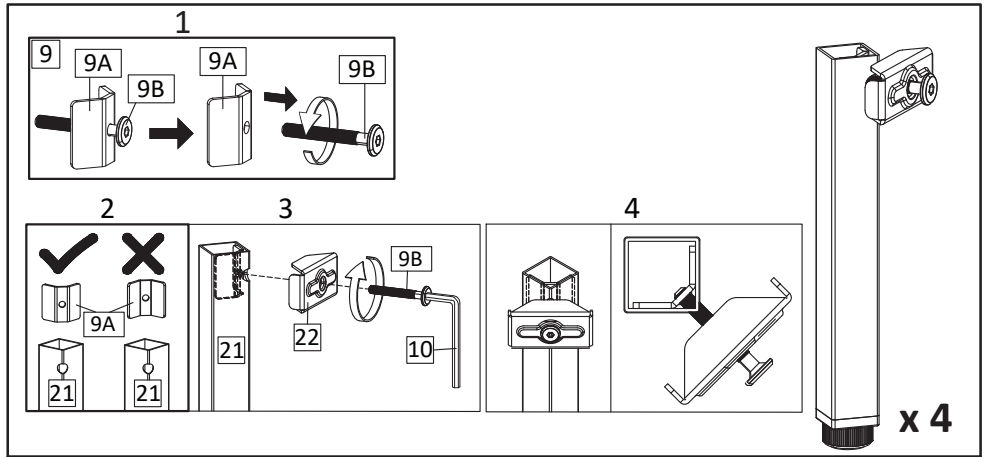

STEP13: First, remove the M6 x 40 mm screw (HW9B) from the Support Corner Brace (HW9A). Second, insert the Support Corner Brace (HW9A) into the Leg (HW21), ensuring that the hole in the Support Corner Brace aligns with the hole in the Leg. Third, insert the M6 x 40 mm screw (HW9B) into the hole in the Corner Brace (HW22), and insert it into the hole in the Leg, then tighten it slightly.

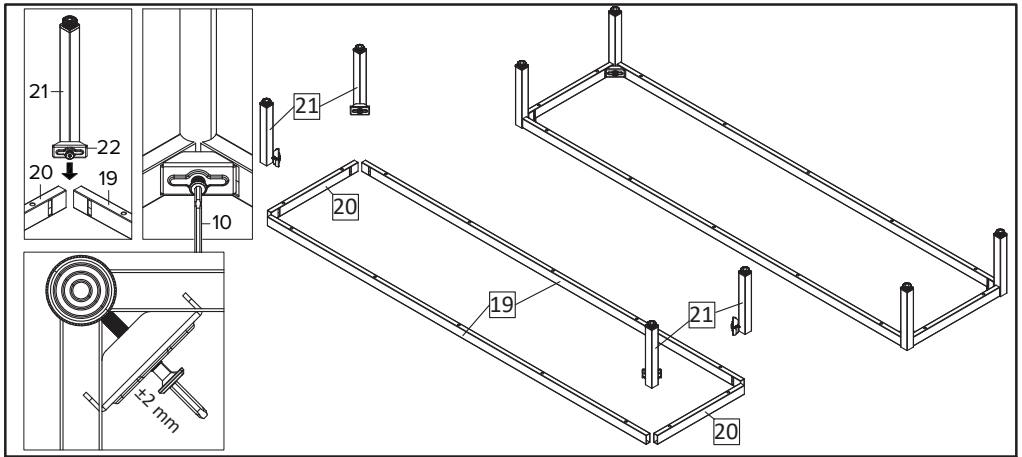

STEP14: Place Support Metal Leg 1 (HW19) and Support Metal Leg 2 (HW20) on the floor as shown in the image. Then, install the prepared leg (HW21). Ensure that the Corner Brace (HW22) hooks into the holes of Support Metal Leg 1 (HW19) and Support Metal Leg 2 (HW20). Use the Allen Key (HW10) to slightly tighten the screws, just enough to hold the Support Metal Legs in place.Do not fully tighten them. Repeat this process for the remaining legs.

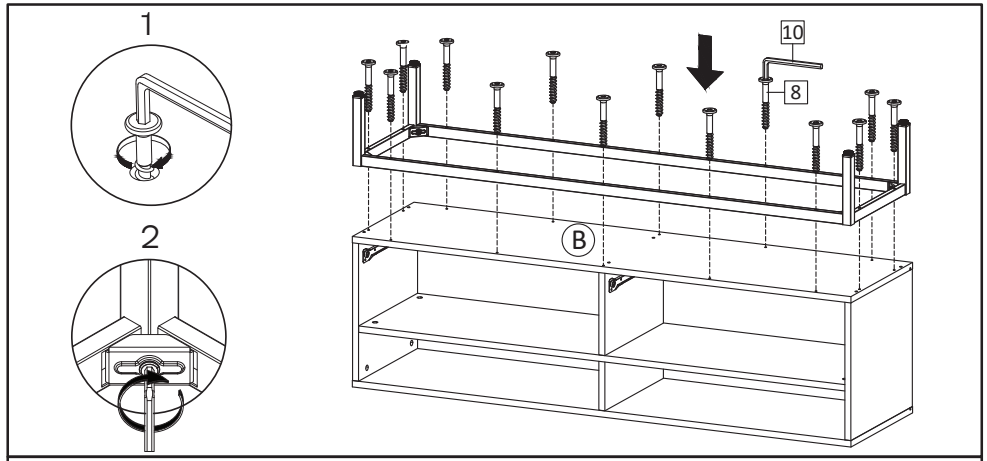

STEP15: Install assembled leg unit from Step 14 onto main assembled unit by inserting Screw (HW8). Tighten with Allen Key (HW10). Then tighten all the Screw on the assembled leg unit.

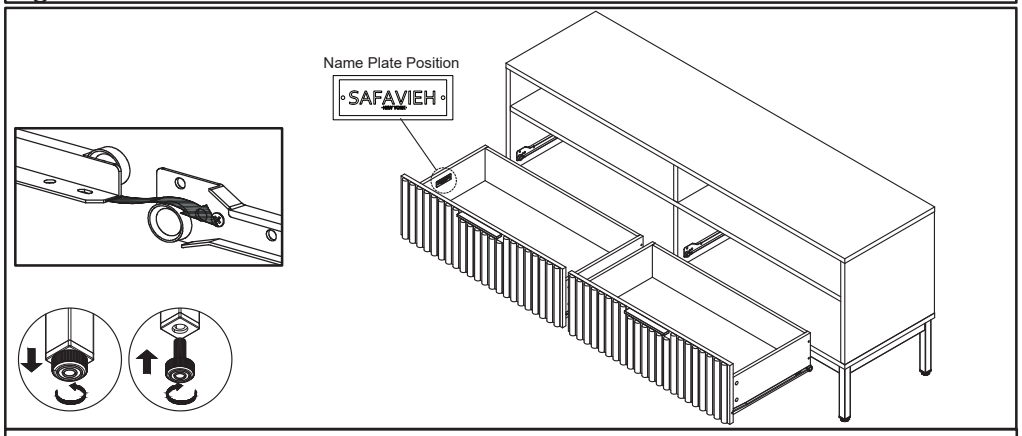

STEP16: Bring the media stand into upright position, hold the sides of drawer, position the wheel of Drawer Runner at drawer back and the wheel of Drawer Runner at side boards, according to the image.
Slide in the drawers one by one into the media stand.
Place your furniture on level floor. The legs come with adjustable leveller, adjust it as needed until your furniture sit steadily on the floor.

PREPARATION

*Before beginning assembly of product, make sure all parts are present. Compare parts with part contents list and hardware contents list.
*If any part is missing or damaged, do not attempt to assemble the product.
*Estimated Assembly Time: 60 minutes.
*Tools Required for Assembly: Phillips Head Screwdriver & Allen Key (Included)
*If you are having difficulty, our friendly Customer Care team is always here to help. Please email **customersupport@safavieh.com**

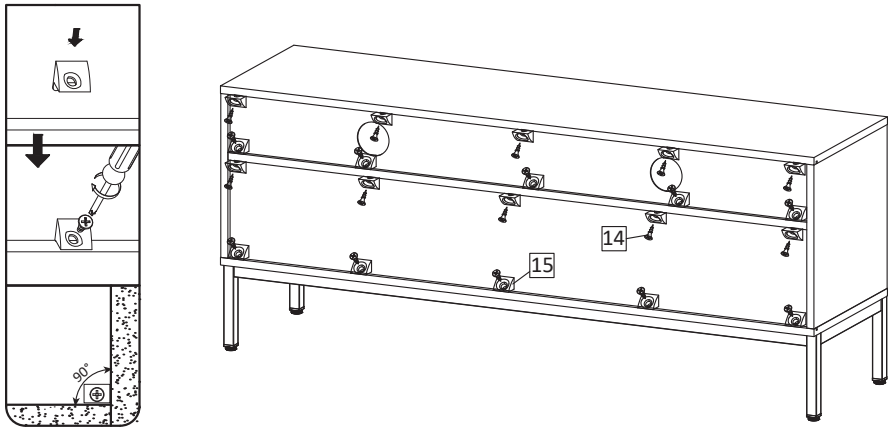

STEP17: Use Wedge (HW15), Screw M3.5 x15.5mm (HW14) to tighten the back of media stand by using screwdriver. Please align the top board and bottom board in 90° position againt the side board, before securing the wedges (HW15)

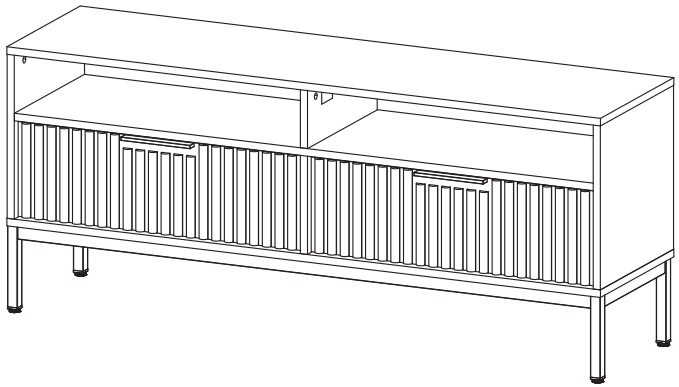

STEP18: Assembly is complete.

TIPPING RESTRAINTS KIT INSTALLATION GUIDANCE
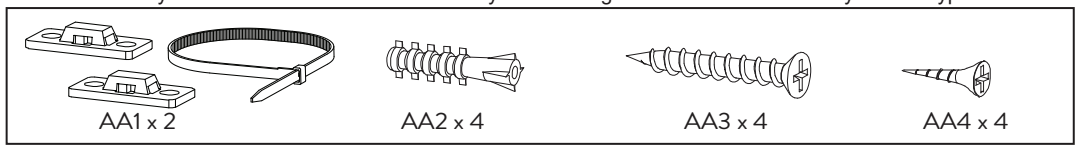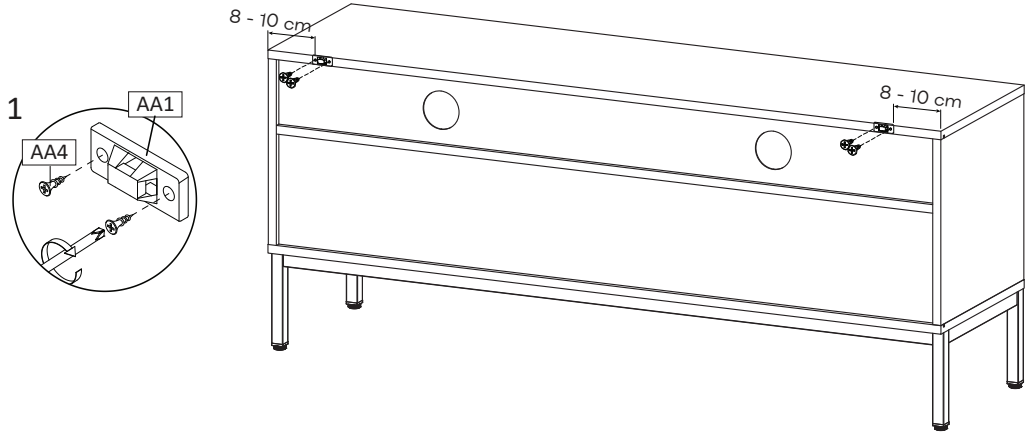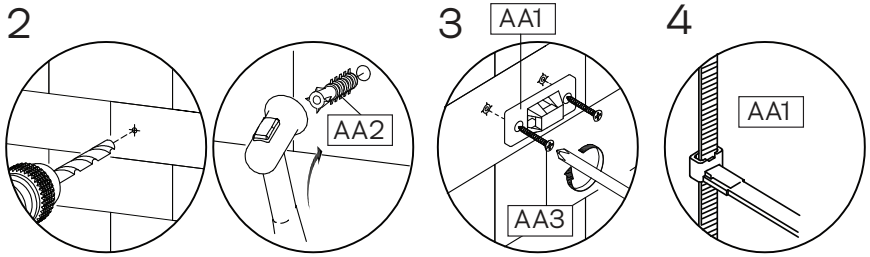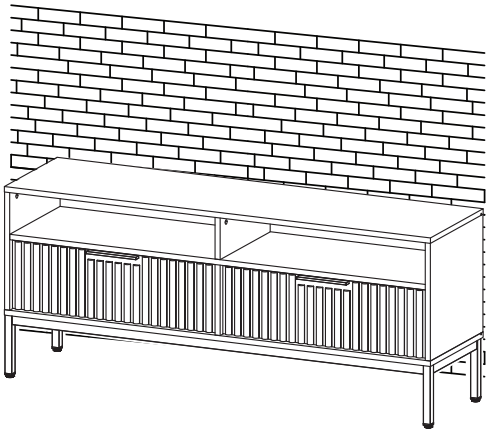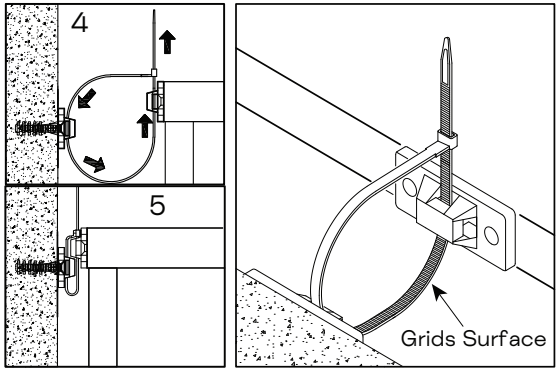
Different wall materials require unique wall fasteners.
The wall plugs (AA2) and screws (AA3) are designed for fixing to concrete walls only.
Please consult your local hardware store to ensure you are using the correct hardware for your wall type.