NOTICE

* Please make sure that you have all parts indicated and they are in good condition before you begin assembly of this item. Refer to part list and hardware list below for guidance.
* This item should be assembled on a soft surface to prevent scratching the finish during assembly.
* This item may require periodic tightening.
* If you are having difficulty, our friendly Customer Care team is always here to help. Please email **customersupport@safavieh.com**

PREPARATION

*Before beginning assembly of product, make sure all parts are present. Compare parts with part contents list and hardware contents list.
* If any part is missing or damaged, do not attempt to assemble the product.
* Estimated Assembly Time: 10 minutes.
* Tools Required for Assembly (included): Allen Key.

CARE AND MAINTENANCE

WOOD CARE

Adhesive felt pads should always be applied to areas of furniture which make direct contact with flooring, said application will prevent damage to the furniture and or surfaces on which the furniture lies. Objects placed on articles of furniture should rest on non abrasive material as to prevent damage to the wood finish. Objects whose composition consists of plastic and rubber are known to discolor and damage the wood surfaces on which they rest. Wipe up spills immediately and avoid common hazards such as hot dishes, harsh solvents and abrasives. Cleaning should be done with a soft lint free cotton cloth dampened with water or furniture polish.
On highly used surfaces we recommend applying a quality paste wax which should be used on a regular basis to provide additional protection from scratches and spills. How often you apply the wax depends on how much wear the furniture receives.

SAFAVIEH FURNITURE

Model # DCH6902
Product Dimensions: W17.5" X D21.8" X H38.3"

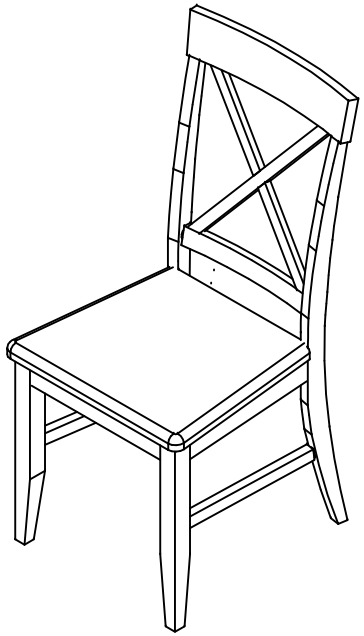

WARNING

Weight Capacity-275 LBS
Warning : Do not stand on Chair.
Warning : Do not over torque bolts.

PIECE	DESCRIPTON	PICTURE	QUANTITY
A	Backrest		1X
B	Box Seat With Panel	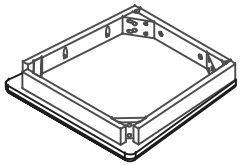	1X
C	Front Leg-1 (L)	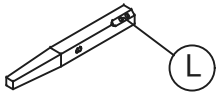	1X
D	Front Leg-2 (R)	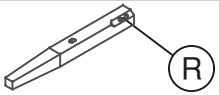	1X
E	Stretcher-1 (L)	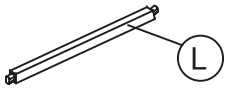	1X
F	Stretcher-2 (R)	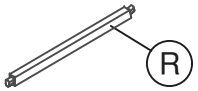	1X
HW1	ALLEN KEY (M4X65mm)		1X
HW2	JCBC BOLT (M6 X 80mm)		4X
HW3	JCBC BOLT (M6 X 60mm)		4X
HW4	JCBC BOLT (M6 X 30mm)		2X
HW5	SPRING WASHER (M6 X 12mm)		10X
HW6	FLAT WASHER (M6 X 16mm)		8X
HW7	PAN HEAD SCREW (M4 X 38mm)	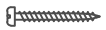	4X

PREPARATION

* Before beginning assembly of product, make sure all parts are present. Compare parts with part contents list and hardware contents list.
* If any parts is missing or damaged, do not attempt to assemble the product.
* Estimated Assembly Time: 10 minutes.
* Tools Required for Assembly (included): Allen Key
* If you are having difficulty, our friendly Customer Care team is always here to help. Please e-mail **customersupport@safavieh.com**

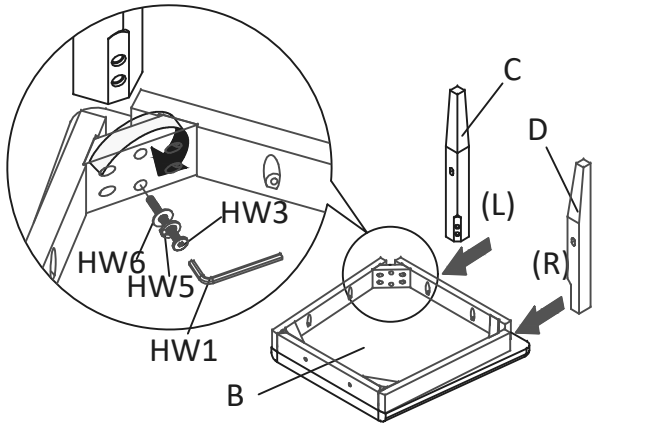

STEP 1: INSERT THE FRONT LEGS (C AND D) INTO THE SEAT BASE (B). USE BOLTS (HW3) WITH WASHERS (HW5 AND HW6). DO NOT FULLY TIGHTEN YET.

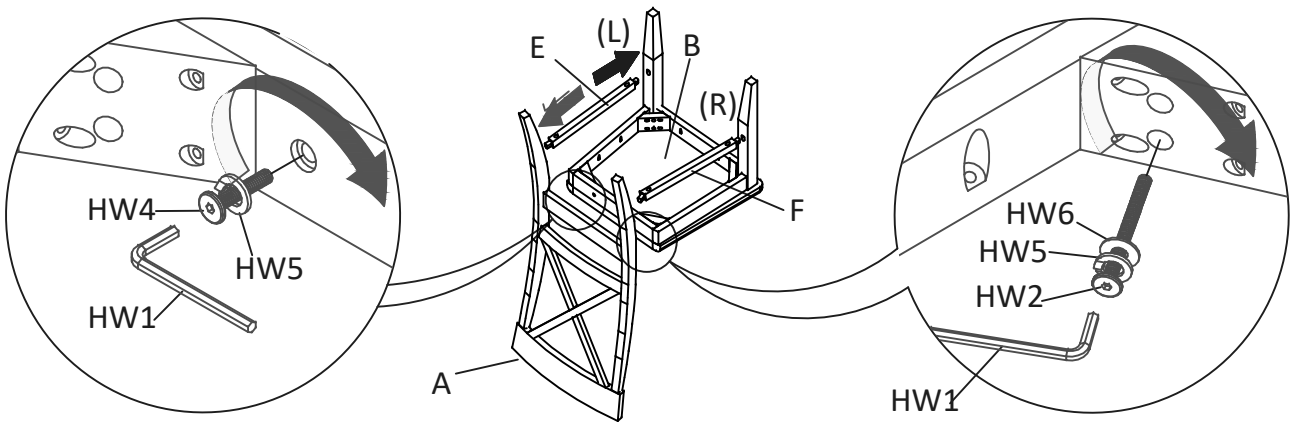

STEP 2:
(i) INSERT THE STRETCHER (E AND F) INTO THE FRONT LEG (C AND D).
(ii) INSERT THE BACKREST (A) INTO THE SEAT BASE (B). USE BOLT (HW2) WITH WASHERS (HW5 AND HW6). ALSO USE BOLTS (HW5) WITH WASHERS (HW4). DO NOT FULLY TIGHTEN YET.

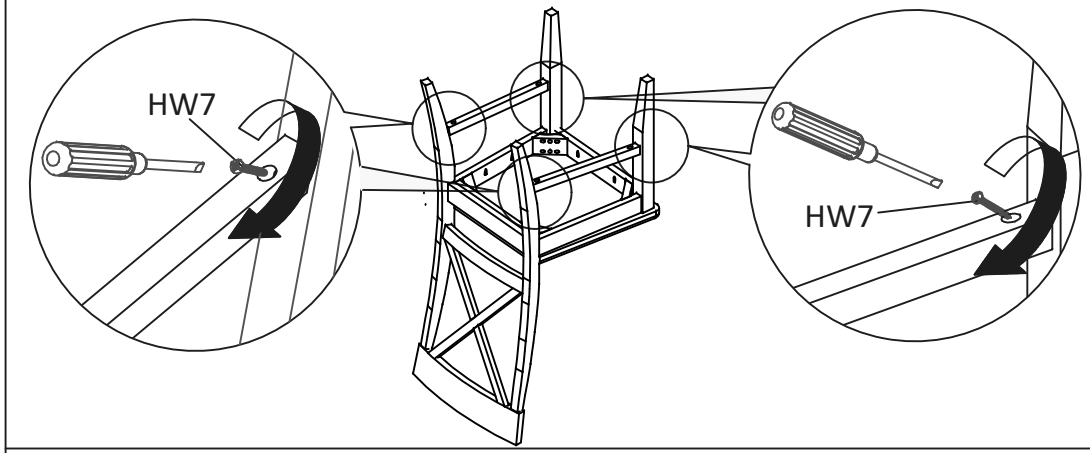

STEP 3: TIGHTEN STRETCHER (E AND F) WITH FRONT LEG (C AND D) AND BACKREST (A). USE SCREW (HW7).

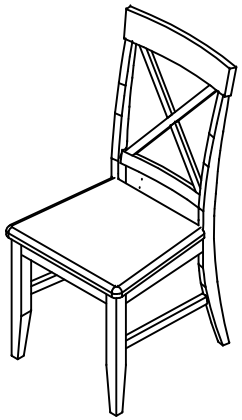

STEP 4: PUT THE CHAIR UPRIGHT AND MAKE SURE ALL LEGS ARE LEVEL, THEN FIRMLY TIGHTEN BOLTS WITH ALLEN KEY (HW1) WHILE THE CHAIR IS UPRIGHT AS PICTURE ABOVE. THIS ITEM MAY REQUIRE PERIODIC TIGHTENING.