CARE AND MAINTENANCE

Always use felt pads under all articles to prevent discoloration or softening of the lacquer. Plastic and rubber bases on items can discolor wood. Wipe up spills immediately and avoid common hazards such as hot dishes, harsh solvents and abrasives. Cleaning should be done with a soft lint free cotton cloth dampened with water or furniture polish. On highly used surfaces we recommend applying a quality paste wax which should be used on a regular basis to provide additional protection from scratches and spills. How often you apply the wax depends on how much wear the furniture receives.

NOTICE

* Please make sure that you have all parts indicated before you begin assembly of this item
* This item should be assembled on a soft surface to prevent scratching the finish during assembly
* This item may require periodic tightening

SAFAVIEH FURNITURE

Model# AMH4126A

Product Dimensions: 64.8"WX17.5"DX 30.7"H

Part List and Hardware List

PIECE	DESCRIPTION	PICTURE	QUANTITY
A	Table top		1X
B	Leg		3X
C	Metal cross		2X
H1	Allen bolt (short)		12X
H2	Allen bolt (Long)		6X
H3	Allen key		1X

PREPARATION

Before beginning assembly of product, make sure all parts are present. Compare parts with package contents list and hardware contents list.
If any part is missing or damaged, do not attempt to assemble the product.
Estimated Assembly Time: 10 minutes.
Tools Required for Assembly (included): Allen Key

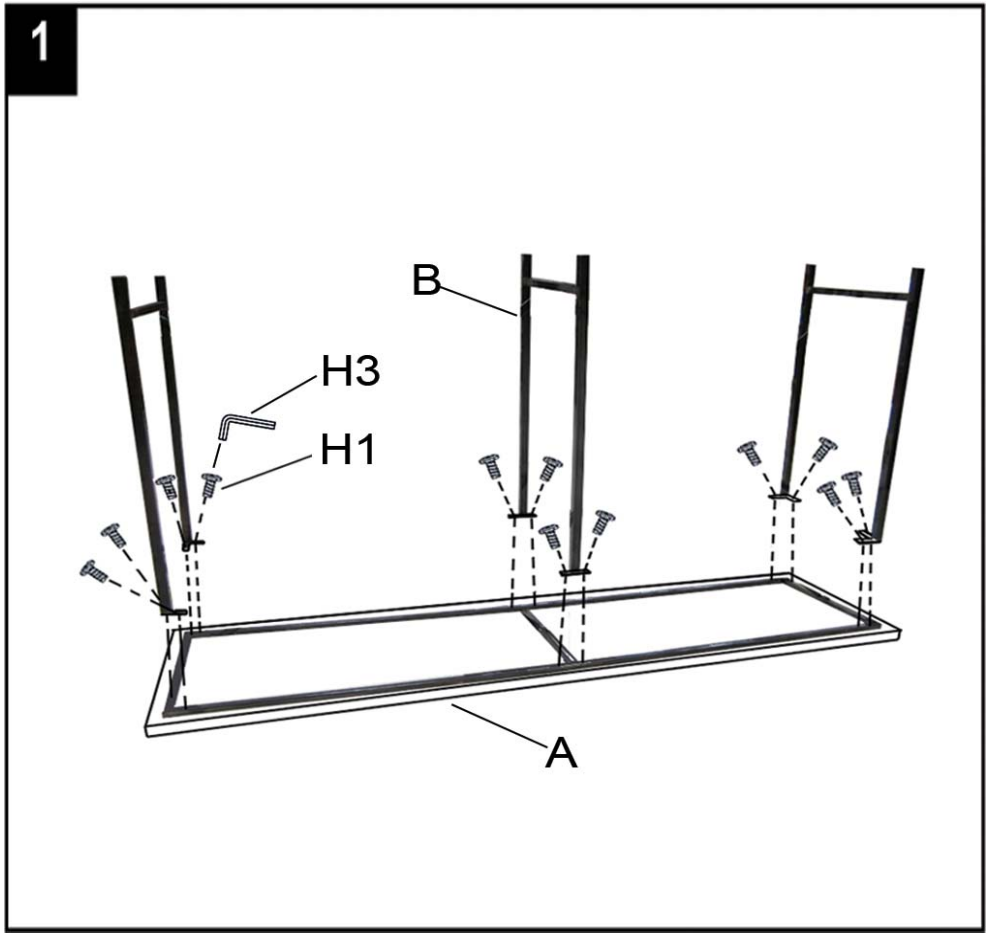

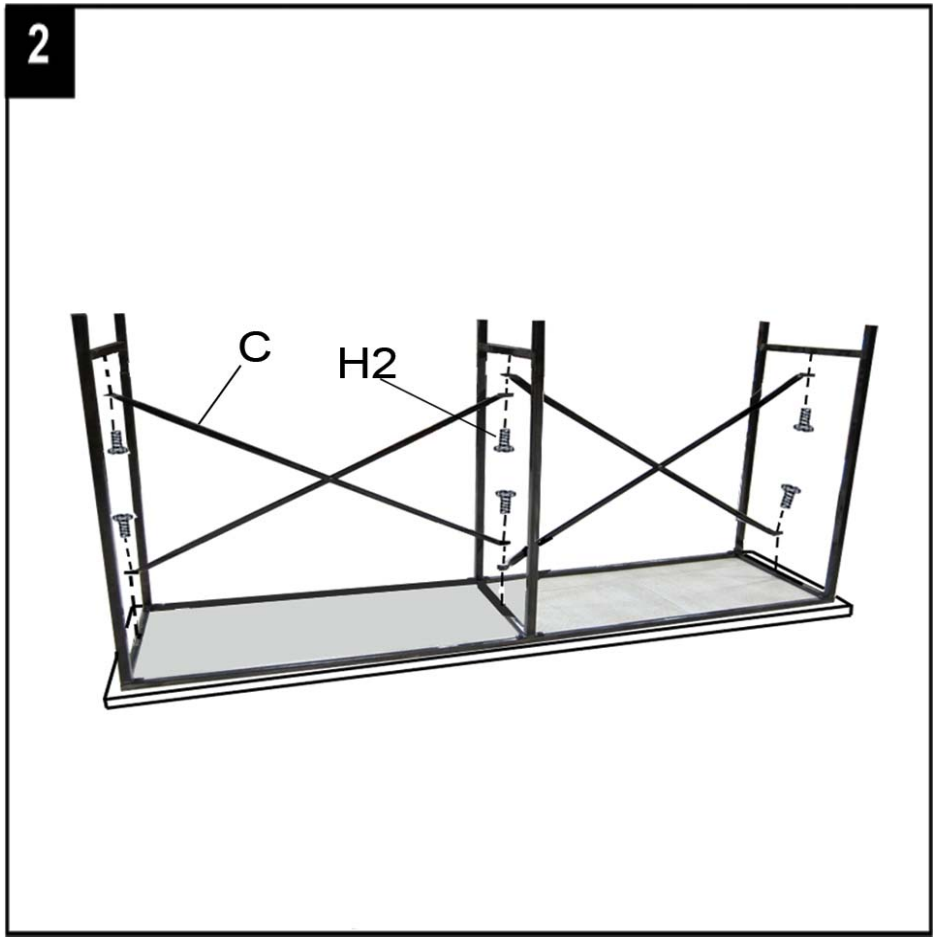

Step 1
Upside down the table top (A) and attach the leg (B) to the table top (A). Use the allen key (H3) to tighten the bolt (H1).

Step 2
Attach the metal cross (C) to the leg (B) and use the allen key (H3) to tighten the bolt (H2).